**HSOP44: plastic, heatsink small outline package; 44 leads; low stand-off height** **SOT1131-1**

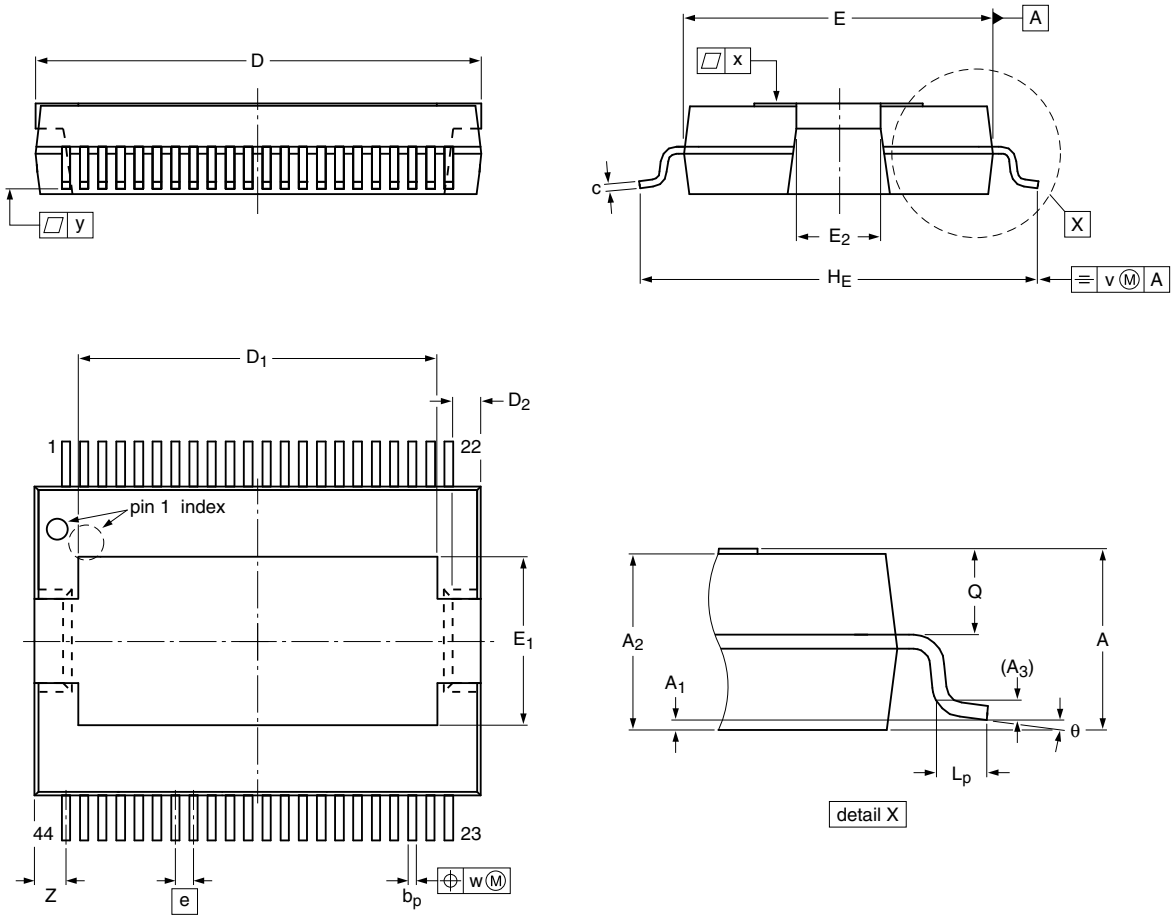


| y | Z | θ |
|---|---|---|
| | 1.30 | 8° |
| 0.07 | 1.13 | 4° |
| | 0.95 | 0° |

0 5 10 mm
scale

Dimensions

| Unit | | A | $A_1$ | $A_2$ | $A_3$ | $b_p$ | c | D(1) | $D_1$ | $D_2$ | E(1) | $E_1$ | $E_2$ | e | $H_E$ | $L_p$ | Q | v | w | x |
|---|---|---|---|---|---|---|---|---|---|---|---|---|---|---|---|---|---|---|---|---|
| mm | max | 3.60 | +0.08 | 3.30 | | 0.38 | 0.32 | 16.0 | 13.0 | 1.10 | 11.1 | 6.2 | 2.9 | | 14.5 | 1.10 | 1.7 | | | |
| | nom | 3.30 | +0.02 | 3.15 | 0.35 | 0.30 | 0.25 | 15.9 | 12.8 | 1.00 | 11.0 | 6.0 | 2.7 | 0.65 | 14.2 | 0.91 | 1.6 | 0.25 | 0.12 | 0.03 |
| | min | 3.05 | −0.04 | 3.00 | | 0.25 | 0.23 | 15.8 | 12.6 | 0.90 | 10.9 | 5.8 | 2.5 | | 13.9 | 0.80 | 1.5 | | | |

Note
1. Plastic or metal protrusions of 0.25 mm maximum per side are not included.

*sot1131-1_po*

| Outline version | References | | | | European projection | Issue date |
|---|---|---|---|---|---|---|
| | IEC | JEDEC | JEITA | | | |
| SOT1131-1 | | | | | | ~~09-02-24~~ 09-03-23 |



© 2009 NXP B.V.
All rights reserved. Reproduction in whole or in part is prohibited without prior consent of the copyright owner. The information presented in this document does not form part of any quotation or contract, is believed to be accurate and reliable and may be changed without notice. No liability will be accepted by the publisher for any consequence of it's use. Publication thereof does not convey or imply any license under patent- or other industrial or intellectual property rights.

Printed in the Netherlands